ORDINANCE NO. 4480

AN ORDINANCE OF THE CITY OF MESQUITE, TEXAS, AMENDING CHAPTER 5 OF THE CODE OF THE CITY OF MESQUITE, TEXAS, AS AMENDED, BY DELETING ARTICLE XIII IN ITS ENTIRETY AND ADDING A NEW ARTICLE XIII THEREBY ADOPTING THE INTERNATIONAL RESIDENTIAL CODE, 2015 EDITION, AND PROVIDING CERTAIN ADDITIONS AND DELETIONS THERETO; PROVIDING FOR A REPEALER CLAUSE; PROVIDING FOR A SEVERABILITY CLAUSE; PROVIDING FOR A PENALTY NOT TO EXCEED TWO THOUSAND ($2,000.00) DOLLARS FOR EACH OFFENSE; AND DECLARING AN EFFECTIVE DATE.

NOW, THEREFORE, BE IT ORDAINED BY THE CITY COUNCIL OF THE CITY OF MESQUITE, TEXAS:

SECTION 1: That Chapter 5 of the Code of the City of Mesquite, Texas, as amended, is hereby amended by deleting Article XIII in its entirety and adding a new Article XIII to read as follows, in all other respects said Code and Chapter to remain in full force and effect:

ARTICLE XIII. RESIDENTIAL CODE

DIVISION 1. GENERAL

Sec. 5-467. Adopted.

The *International Residential Code*, 2015 Edition, a publication of the International Code Council (I.C.C.), is hereby adopted and designated as the official residential code of the City of Mesquite to the same extent as if such code were copied verbatim in this Article subject to the amendments prescribed in this Article. The code shall be applicable to all construction, alterations, movement, enlargement, replacement, repairs, equipment, use and occupancy, location, removal and demolition and maintenance of detached one- and two-family units and multiple single-family units (townhouses) not more than three stories in height with separate means of egress and their accessory structures. A copy of the *International Residential Code*, 2015 Edition, and amendments thereto shall be maintained in the office of the City Secretary as an original document and ordinance of the City.

DIVISION 2. AMENDMENTS

Sec. 5-468. Amendments to the International Residential Code, 2015 Edition.

The following amendments are made to the *International Residential Code*, 2015 Edition:

(1) *Chapter 1, Scope and Administration.*

(a) *Section R102.4.* Amend by deleting the first paragraph in the section in its entirety and adding a new first paragraph and an exception to Section R102.4 to read as follows:

Referenced codes and standards. The codes, when specifically adopted, and standards referenced in this code shall be considered part of the requirements of this code to the prescribed extent of each such reference. Whenever amendments have been adopted to the referenced code and standards, each reference to said code and standard shall be considered to reference the amendments as well. Any reference made to NFPA 70 or the ICC Electrical Code shall mean the *National Electrical Code* as adopted.

Exception: Where enforcement of a code provision would violate the conditions of the listing of the equipment or appliance, the conditions of the listing and manufacturer's instructions shall apply.

(b) *Section R104.10.* Amend by deleting Section R104.10 in its entirety.

(c) *Section R105.2.* Amend by deleting Item #s 1, 2, 3, 5, 7 and 10 from Section R105.2 in their entirety and renumber the remaining items appropriately.

(d) *Section R105.3.1.1.* Amend by deleting Section R105.3.1.1 in its entirety.

(e) *Section R105.5.* Amend by deleting the section in its entirety and adding a new Section R105.5 to read as follows:

Expiration. Every permit issued shall expire and become null and void if (i) the permittee fails to commence work on the site authorized by such permit within 30 days after its issuance, or (ii) the permittee fails to have the work authorized on the site by such permit inspected during any 90-day period after the work has commenced. It shall be unlawful to commence or recommence work after a permit expires without obtaining a new permit or receiving an extension from the Building Official. The Building Official is authorized to grant, in writing, one or more extensions of time, for periods not more than 90 days each. The extension shall be requested in writing and justifiable cause demonstrated.

(f) *Section R106.1.4.* Amend by deleting Section R106.1.4 in its entirety.

(g) *Section R107.1.2.* Amend by adding a new Section R107.1.2 to read as follows:

Toilet facilities required. Every construction project requiring a building permit within the City limits of the City of Mesquite shall have adequate toilet facilities for workers associated with the

project. At least one permanent or temporary toilet facility shall be maintained in each subdivision for the employees or subcontractors of each builder holding a permit for a building in that subdivision.

Permanent toilet facility is defined as a room in an existing building or in the building being constructed with a water closet installed in such a room, which conforms to the Plumbing Code and is continuously available to all workers involved in a construction project.

Temporary toilet facility is defined as a portable fully enclosed chemical sanitized toilet, which is serviced and cleaned at least once each week.

(h) *Section R108.2.* Amend by deleting the section in its entirety and adding a new Section R108.2 to read as follows:

Schedule of permit fees. On buildings, structures, electrical, gas, mechanical and plumbing systems or alterations requiring a permit, a fee for each permit shall be paid as required before work is commenced, in accordance with the schedule as established by the City of Mesquite.

(i) *Section R108.4.* Amend by adding an exception to Section R108.4 to read as follows:

Exception: Whenever a permit is required for a building, structure, electrical, gas, mechanical or plumbing system, and work is commenced without securing the applicable permit, the Building Official may charge double the amount of the usual fee for the permit.

(j) *Section R109.1.3.* Amend by deleting the section in its entirety and adding a new Section R109.1.3 to read as follows:

Floodplain inspections. For construction permitted in areas prone to flooding as established by Table R301.2(1), upon placement of the lowest floor including basement and prior to further vertical construction, the Building Official may require submission of documentation, prepared and sealed by a registered design professional, of the elevation of the lowest floor, including basement, required in Section R322.

(g) *Section R110.1.* Amend by deleting Section R110.1 in its entirety.

(h) *Section R110.2.* Amend by deleting the section in its entirety and adding a new Section R110.2 to read as follows:

Change in occupancy. When a rental dwelling unit is vacated by the tenant, the owner of the unit must apply for and receive a certificate of occupancy from the Building Official prior to the unit being reoccupied. The Building Official or his designated representative will inspect the unit and premises for compliance with this code, the Property Maintenance Code and other applicable ordinances of the City. If deficiencies are found, the Building Official may prohibit occupancy of the unit and premises until such time as the owner takes action needed to bring the unit and premises into compliance. The inspection required by this section shall also be required for a non-owner occupied dwelling unit and premises prior to its original occupancy.

1. If the dwelling unit is found to be occupied prior to inspection, the Building Official shall assess an administrative fee of One Hundred ($100.00) Dollars to defray the expense to the City for conducting an inspection of an occupied unit. Said fee shall be paid by the owner prior to any further inspection or reinspection of the unit and shall be cumulative of all other fees or penalties provided in this code.

(i) *Section R110.3.* Amend the first paragraph in Section R110.3 to read as follows:

Certificate issued. When the Building Official determines that a non-owner occupied dwelling unit and premises are in compliance with the provisions of this and other applicable codes, the Building Official shall issue a certificate of occupancy containing the following:

1. The address of the structure;

2. The name and address of the property owner;

3. A statement that the described portions of the structure have been inspected for compliance with the requirements of this code;

4. The name of the Building Official;

5. The edition of the code on which the certificate was issued; and

6. The date the certificate of occupancy was issued.

(j) *Section R110.3.1.* Amend by adding a new Section 110.3.1 to read as follows:

No certificate of occupancy shall be issued for a non-owner occupied dwelling unit until the owner has paid all perfected liens of whatsoever nature attached to the property in favor of the City of Mesquite, together with interest as allowed by law.

(k) *Section R111.1.* Amend by deleting the section in its entirety and adding a new Section R111.1 to read as follows:

Connection of service utilities. No person shall make connections from a utility, source of energy, power or water to any new dwelling unit, townhouse or system regulated by this code and requiring a permit until such connection is approved by the Building Official. No person shall make connections for water utilities to any non-owner occupied dwelling unit that is required by this code to be inspected prior to occupancy until the unit is approved as code compliant and the Building Official has issued a certificate of occupancy.

(l) *Section R111.3.* Amend by deleting the section in its entirety and adding a new Section R111.3 to read as follows:

Authority to disconnect service utilities. In case of an emergency necessitating disconnection of utilities to eliminate an immediate hazard to life or property, the Building Official shall have the authority to authorize disconnection of utility service to a building, structure or system regulated by this code and the referenced codes and standards set forth in Section R102.4. The Building Official shall notify the service utility and whenever possible the owner and occupant of the building, structure or service system of the decision to disconnect prior to taking such action. If prior notification is not possible, the owner or occupants of the building, structure or service system shall be notified in writing, as soon as practical thereafter. In addition, the Building Official shall have the authority to authorize disconnection of utility service to a building, structure or system, if a building, structure or system is found to be in violation of this code, including a connection made without the approval required by Sections R111.1 and R111.2, or any other ordinance of the City and after notification of the violation has been made to the owner and/or occupant of the building or structure and the violation is not corrected.

(m) *Section R112.1.* Amend by deleting the section in its entirety and adding a new Section R112.1 to read as follows:

Appeals. Any person shall have the right to appeal a decision of the Building Official to the Building Standards Board established in

Section 5-25 according to the procedures and time for appeal set forth therein.

(n) *Section R114.3.* Amend by adding a new Section R114.3 to read as follows:

Construction debris. Construction debris from that work for which a permit is required must be confined to a containment structure/container approved by the Building Official or his authorized representative.

(2) *Chapter 2, Definitions.*

(a) *Section R202.*

1. Amend by adding a new definition of "Dwelling Unit, Non-Owner Occupied" in Section R202 to read as follows:

Dwelling unit, non-owner occupied. A dwelling unit, room or other living space in a one- or two-family dwelling that is not inhabited, not intended to be inhabited, by the person holding legal title thereto, or that is let or intended to be let to any person unrelated to the owner. A non-owner occupied dwelling unit shall include any unit, room or other living space occupied, or intended to be occupied, pursuant to a written or verbal tenancy agreement of any duration or a contract for deed or any other contract or deed that conveys less than legal title to the occupant.

2. Amend by deleting the definition of "Townhouse" in the section in its entirety and adding a new definition of "Townhouse" in Section R202 to read as follows:

Townhouse. A single-family unit constructed in a group of attached units separated by property lines in which each unit extends from foundation to roof and with open space on at least two sides.

(3) *Chapter 3, Building Planning.*

(a) *Table R301.2(1).* Amend by deleting the chart in the table in its entirety and adding a new chart to Table R301.2(1) to read as follows:

TABLE R301.2(1)
CLIMATIC AND GEOGRAPHIC DESIGN CRITERIA

Table R301.2(1); fill in as follows:

GROUND SNOW LOAD	WIND DESIGN		SEISMIC DESIGN CATEGORY[f]
	SPEED[d] (mph)	Topographic Effects[k]	
5 lb/ft^2	115 (3-sec-gust)/76 fastest mile	No	A

SUBJECT TO DAMAGE FROM		
Weathering[a]	Frost line depth[b]	Termite[c]
moderate	6"	very heavy

WINTER DESIGN TEMP[e]	ICE BARRIER UNDER-LAYMENT REQUIRED[h]	FLOOD HAZARDS[g]	AIR FREEZING INDEX[i]	MEAN ANNUAL TEMP[j]
22°F	No	local code	69°F	64.9°F

For SI: 1 pound per square foot = 0.0479 kN/m.0^2, 1 mile per hour = 1.609 km/h.

(b) *Section R302.3.* Amend by adding a third exception to Section R302.3 to read as follows:

Two-family dwelling units that are also divided by a property line through the structure shall be separated as required for townhouses.

(c) *Section R302.5.1.* Amend by deleting the section in its entirety and adding a new Section R302.5.1 to read as follows:

Opening protection. Openings from a private garage directly into a room used for sleeping purposes shall not be permitted. Other openings between the garage and residence shall be equipped with solid wood doors not less than 1-3/8 inches (35 mm) in thickness, solid or honeycomb core steel doors not less than 1-3/8 inches (35 mm) thick, or 20-minute fire-rated doors.

(d) *Section R302.5.2.* Amend by deleting the section in its entirety and adding a new Section R302.5.2 to read as follows:

Duct penetration: Ducts in the garage and ducts penetrating the walls or ceilings separating the dwelling from the garage shall have no openings into the garage and shall be protected as required by Section 302.11, Item 4.

(e) *Section R302.7.* Amend by deleting the section in its entirety and adding a new Section R302.7 to read as follows:

Under-stair protection: Enclosed accessible space under stairs shall have walls, under-stair surface and any soffits protected on the

enclosed side with 5/8-inch (15.8 mm) fire-rated gypsum board or one-hour fire-resistive construction.

(f) *Section R309.1.* Amend by deleting the first sentence in the section in its entirety and adding a new first sentence in Section R309.1 to read as follows:

Floor surfaces. Garage floor surfaces shall be of reinforced concrete material designed to specifications as required by City code.

(g) *Section R309.2.* Amend by adding a new sentence at the end of the first paragraph in Section R309.2 to read as follows:

Carport floor surfaces shall be reinforced concrete designed to specifications as required by City ordinance, policy or other approved surfaces as allowed by City ordinance.

(h) *Section R311.7.8.3.* Amend by deleting the section in its entirety and adding a new Section R311.7.8.3 to read as follows:

Handrail grip size. The handgrip portion of handrail shall have a circular cross section of 1-1/4 inches (32 mm) minimum to 3-1/8 inch (80 mm) maximum. Other handrail shapes that provide an equivalent grasping surface are permissible. Edges shall have a minimum radius of 1/8–inch (3.2 mm).

(i) *Section R312.1.1.* Amend by adding a sentence at the end of the paragraph in Section R312.1.1 to read as follows:

Required guards shall not be constructed with horizontal rails or other ornamental pattern that results in a ladder effect.

(j) *Section R319. Amend by deleting the section in its entirety and adding a new Section R319 to read as follows:*

Premises identification. The official house or street number assigned to the property must be displayed at both the front and rear of the property. The numbers shall be in Arabic block numerals and at least four inches high by one-half inch wide.

(k) *Section R322.1. Amend by deleting the section in its entirety and adding a new Section R322.1 to read as follows:*

General. Buildings and structures, when permitted to be constructed in flood hazard areas (including A or V zones) as established in Table R301.2(1) shall be designed and constructed as required in accordance with the provisions contained in this section or by local provisions as applicable.

(l) *Section R326.1. Amend by deleting Section R326.1 in its entirety and refer to Article IX – Swimming Pools of Chapter 5 of the Code Book of the City of Mesquite, Texas.*

(4) *Chapter 4, Foundations.*

(a) *Section R401.2.* Amend by adding a new second paragraph to Section R401.2 to read as follows:

> Every foundation and/or footing, or any size addition to an existing post-tension foundation, regulated by this code shall be designed and sealed by a Texas-registered engineer.

(5) *Chapter 6, Wall Construction.*

(a) *Section 602.6.1.* Amend by deleting the section in its entirety and adding a new Section 602.6.1 to read as follows:

> *Drilling and notching of top plate.* When piping or ductwork is placed in or partly in an exterior wall or interior load-bearing wall, necessitating cutting, drilling or notching of the top plate by more than 50 percent of its width, a galvanized metal tie not less than 0.054-inch thick (1.37 mm) (16 Ga) and five inches (127 mm) wide shall be fastened across and to the plate at each side of the opening with not less than eight 10d (0.148-inch diameter) having a minimum length of 1 ½ inches (38 mm) at each side or equivalent. Fasteners will be offset to prevent splitting of the top plate material. The metal tie must extend a minimum of six inches past the opening. See Figure R602.6.1.

(b) *Figure 602.6.1.* Amend by deleting the figure in its entirety and adding a new Figure 602.6.1 as follows:

WALL CONSTRUCTION

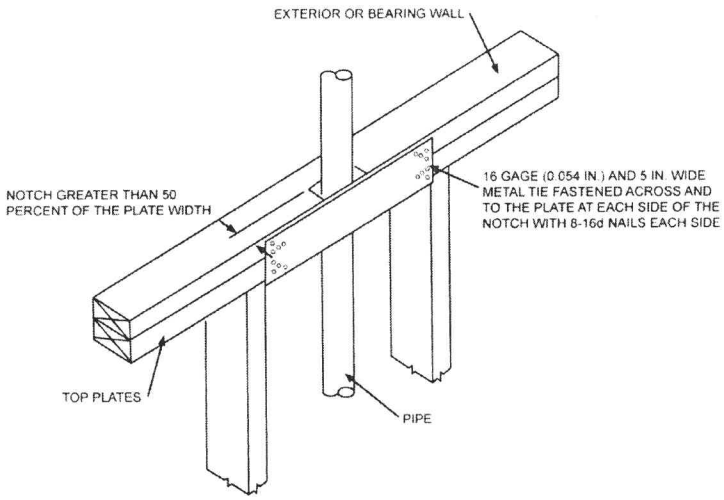

For SI: 1 inch = 25.4 mm

FIGURE R602.6.1
TOP PLATE FRAMING TO ACCOMMODATE PIPING

(6) *Chapter 7, Wall Coverings.*

(a) *Section R703.8.4.1.* Amend by deleting the last sentence in the section and adding the following information to Section R703.8.4.1 to read as follows:

In stud framed exterior walls, all ties shall be anchored to studs as follows:

1. When studs are 16 inches (407 mm) o.c., stud ties shall be spaced no further apart than 24 inches (737 mm) vertically starting approximately 12 inches (381 mm) from the foundation; or

2. When studs are 24 inches (610 mm) o.c, stud ties shall be spaced no further apart than 16 inches (483 mm) vertically starting approximately 8 inches (254 mm) from the foundation.

(7) *Chapter 9, Roof Assemblies.*

(a) *Section R902.1.* Amend by adding a new exception #5 to Section R902.1 to read as follows:

5. Non-classified roof coverings shall be permitted on one-story detached accessory structures used as tool and storage sheds, playhouses and similar uses, provided the floor area

does not exceed 120-square feet. When exceeding 120-square feet of floor area, buildings of U-occupancies may use non-rated non-combustible coverings.

(8) *Chapter 13, General Mechanical System Requirements.*

(a) *Section M1305.1.3.* Amend by deleting the section in its entirety and adding a new Section M1305.1.3 to read as follows:

Appliances in attics. Attics containing appliances requiring access shall be provided with an opening and a clear and unobstructed passageway large enough to allow removal of the largest appliance, but not less than 30 inches (762 mm) high and 22 inches (559 mm) wide and not more than 20 feet (6,096 mm) in length when measured along the centerline of the passageway from the opening to the appliance. The passageway shall have continuous solid flooring not less than 24 inches (610 mm) wide. A level service space at least 30 inches (762 mm) wide shall be present along sides of the appliance where access is required. The clear access opening dimensions shall be a minimum of 20 inches (508 mm) by 30 inches (762 mm), or larger where such dimensions are not large enough to allow removal of the largest appliance. As a minimum, access to the attic space shall be provided by one of the following:

1. A permanent stair.

2. A pull-down stair with a minimum of 300-lb (136 kg) capacity.

3. An access door from an upper floor level.

4. An access panel may be used in lieu of items 1, 2 and 3 with prior approval of the Code Official due to building conditions.

Exception: The passageway and level service space are not required where the appliance is capable of being serviced and removed through the required opening.

(b) *Section M1305.1.3.1.* Amend by adding a sentence at the end of the paragraph in Section M1305.1.3.1 to read as follows:

Low voltage wiring of 50 volts or less shall be installed in a manner to prevent physical damage.

(c) *Section M1305.1.5.* Amend by adding a new Section M1305.1.5 to read as follows:

Attic water heaters. Water heaters are prohibited from being installed within any attic cavity or space.

(d) *Section M1307.3.1.* Amend by deleting Section M1307.3.1 in its entirety.

(9) *Chapter 20, Boilers/Water Heaters.*

(a) *Section M2005.2.* Amend by deleting the section in its entirety and adding a new Section 2005.2 to read as follows:

Prohibited locations. Fuel-fired water heaters shall not be installed in a room used as a storage closet. Water heaters located in a bedroom or bathroom shall be installed in a sealed enclosure so that combustion air will not be taken from the living space. Access to such enclosure may be from the bedroom or bathroom when through a solid door, weather-stripped in accordance with the exterior door air leakage requirements of the International Energy Conservation Code and equipped with an approved self-closing device. All combustion air shall be taken from the outdoors in accordance with Section 304.6 of the International Fuel Gas Code.

(10) *Chapter 24, Fuel Gas.*

(a) *Section G2408.3.* Amend by deleting Section G2408.3 in its entirety.

(b) *Section G2412.5.* Amend by adding a second paragraph to Section G2412.5 to read as follows:

Both ends of each section of medium pressure gas piping shall identify its operating gas pressure with an approved tag. The tags are to be composed of aluminum or stainless steel and the following wording shall be stamped into the tag:

"Warning
1/2 to 5 psi gas pressure
DO NOT REMOVE"

(c) *Section G2415.2.2.* Amend by adding an exception to Section G2415.2.2 to read as follows:

Exception: Corrugated stainless steel tubing (CSST) shall be a minimum of one-half inch.

(d) *Section G2415.12.* Amend by deleting the section in its entirety and adding a new Section G2415.12 to read as follows:

Minimum burial depth. Underground piping systems shall be installed a minimum depth of 18 inches (458 mm) below grade.

(e) *Section G2417.1.* Amend by deleting the section in its entirety and adding a new Section G2417.1 to read as follows:

> *General.* Prior to acceptance and initial operation, all piping installations shall be inspected and pressure tested to determine that the materials, design, fabrication and installation practices comply with the requirements of this code. The permit holder shall make the applicable tests prescribed in Sections 2417.1.1 through G2417.1.5 to determine compliance with the provisions of this code. The permit holder shall give reasonable advance notice to the Building Official when the piping system is ready for testing. The equipment, material, power and labor necessary for the inspections and test shall be furnished by the permit holder and the permit holder shall be responsible for determining that the work will withstand the test pressure prescribed in the following tests.

(f) *Section G2417.4.* Amend by deleting the section in its entirety and adding a new Section G2417.4 to read as follows:

> *Test pressure measurements.* Test pressure shall be measured with a manometer or with a pressure measuring device designed and calibrated to read, record or indicate a pressure loss due to leakage during the pressure test period. The source of pressure shall be isolated before the pressure tests are made. The equipment used shall be of an appropriate scale such that pressure loss can be easily determined.

(g) *Section G2417.4.1.* Amend by deleting the section in its entirety and adding a new Section G2417.4.1 to read as follows:

> *Test pressure.* The test pressure to be used shall be not less than 10 psig (68.9 kPa gauge). The piping and valves may be tested at a pressure of at least six inches (152 mm) of mercury measured with a manometer, slope gauge or spring gauge. For welded piping and for piping carrying gas at pressures in excess of 14-inches water column pressure (3.48 kPa), the test pressure shall not be less than 60 pounds per square inch (413.4 kPa).

(h) *Section G2417.4.2.* Amend by deleting the section in its entirety and adding a new Section G2417.4.2 to read as follows:

> *Test duration.* Test duration shall be held for a length of time satisfactory to the Building Official but in no case for less than 15 minutes. For welded piping and for piping carrying gas at pressures in excess of 14-inches water column pressure (3.48 kPa), the test duration shall be held for a length of time satisfactory to the Building Official, but in no case for less than 30 minutes.

(i) *Section G2420.1.4.* Amend by adding a new Section G2420.1.4 to read as follows:

> *Valves in CSST installations.* Shutoff valves installed with corrugated stainless steel (CSST) piping systems shall be supported with an approved termination fitting, or equivalent support, suitable for the size of the valves, of adequate strength and quality, and located at intervals so as to prevent or damp out excessive vibration but in no case greater than 12 inches from the center of the valve. Supports shall be installed so as not to interfere with the free expansion and contraction of the system's piping, fittings and valves between anchors. All valves and supports shall be designed and installed so they will not be disengaged by movement of the supporting piping.

(j) *Section 2420.5.1.* Amend by deleting the section in its entirety and adding a new Section 2420.5.1 to read as follows:

> *Located within the same room:* The shutoff valve shall be located in the same room as the appliance. The shutoff valve shall be within six feet (1829 mm) of the appliance, and shall be installed upstream of the union, connector or quick disconnect device it serves. Such shutoff valves shall be provided with access. Appliance shutoff valves located in the firebox of a fireplace shall be installed in accordance with the appliance manufacturer's instructions. A secondary shutoff valve must be installed within three feet (914 mm) of the firebox if appliance shutoff is located in the firebox.

(k) *Section G2421.1.* Amend by adding a second paragraph and exception to Section G2421.1 to read as follows:

> Access to regulators shall comply with the requirements for access to appliances as specified in Section M1305.
>
> > *Exception:* A passageway or level service space is not required when the regulator is capable of being serviced and removed through the required attic opening.

(l) *Section G2422.1.2.3.* Amend by deleting Exception 1 and Exception 4 from Section G2422.1.2.3 in their entirety and renumber the remaining exceptions appropriately.

(m) *Section G2439.7.2.* Amend by adding a sentence at the end of the paragraph of Section G2439.7.2 to read as follows:

> The size of the duct shall not be reduced along its developed length nor at the point of termination.

(n) *Section G2448.1.1.* Amend by deleting the section in its entirety and adding a new Section G2448.1.1 to read as follows:

Installation requirements. The requirements for water heaters relative to access, sizing, relief valves, drain pans and scald protection shall be in accordance with the International Plumbing Code.

(11) *Chapter 26, General Plumbing Requirements.*

(a) *Section P2603.5.1.* Amend by deleting the section in its entirety and adding a new Section P2603.5.1 to read as follows:

Sewer depth. Building sewers shall be a minimum of 12 inches (304 mm) below grade.

(12) *Chapter 27, Plumbing Fixtures.*

(a) *Section P2709.2.* Amend by adding an exception to Section P2709.2 to read as follows:

Exception: Showers designed to comply with ICC/ANSI A117.1.

(b) *Section P2717.2.* Amend by deleting the last sentence in the section in its entirety and adding a new last sentence in Section P2717.2 to read as follows:

Sink and dishwasher. The waste line of a domestic dishwashing machine discharging into a kitchen sink tailpiece shall connect to a deck mounted air break.

(13) *Chapter 28, Water Heaters.*

(a) *Section P2801.4.* Amend by adding a sentence at the end of Section P2801.4 to read as follows:

Water heaters are prohibited from being installed within any attic space or cavity.

(b) *Section P2801.6.1.* Amend by deleting the section in its entirety and adding a new Section P2801.6.1 to read as follows:

Pan size and drain. The pan shall be not less than 1-1/2 inches (38 mm) in depth and shall be of sufficient size and shape to receive all dripping or condensate from the tank or water heater. The pan shall be drained by an indirect waste pipe having a diameter of not less

than 3/4 inches (19 mm). Piping for safety pan drains shall be of those materials listed in Table 605.4. Multiple pan drains may terminate to a single discharge piping system when approved by the administrative authority and permitted by the manufacturer's installation instructions and installed with those instructions.

(14) *Chapter 29, Water Supply and Distribution.*

(a) *Section P2902.5.3.* Amend by deleting the first sentence in the section in its entirety and adding a new first sentence in Section P2902.5.3 to read as follows:

Minimum standards for landscape irrigation systems. The landscape irrigation rules promulgated by the Texas Commission on Environmental Quality and contained in Title 30, Chapter 344, Subchapters E and F, §§344.50-344.65 of the Texas Administrative Code, as the same may be from time to time amended, are hereby adopted by reference as the landscape irrigation rules of the City.

Lawn irrigation systems. The potable water system to lawn irrigation systems shall be protected against backflow by an atmospheric-type vacuum breaker, a pressure-type vacuum breaker, a double-check assembly or a reduced-pressure principle backflow preventer.

(b) *Section P2902.5.3.1.* Amend by adding a new Section P2902.5.3.1 to read as follows:

Rain and freeze sensors. All new irrigation systems installed and permitted after the effective date of this ordinance shall include installation of operational rain and freeze sensors.

(c) *Section P2902.5.3.2.* Amend by adding a new Section P2902.5.3.2 to read as follows:

Irrigation backflow tests. All irrigation backflow devices shall be tested by a currently licensed and registered State of Texas Backflow Tester, using currently certified calibrated gauges. The irrigation backflow device test shall be observed by the City of Mesquite Public Works Backflow Inspector during regular working hours determined by departmental policy.

(15) *Chapter 30, Sanitary Drainage.*

(a) *Section P3005.2.1.* Amend by adding a sentence at the end of Section P3005.2.1 and a second exception to read as follows:

Upper terminal. Each horizontal drain shall be provided with a cleanout at its upper terminal.

Exception 2: Cleanouts may be omitted on a horizontal drain less than five feet (1,524 mm) in length unless such line is serving sinks or urinals.

(16) *Chapter 31, Vents.*

(a) *Section P3103.1.* Amend by deleting the section in its entirety and adding a new Section P3103.1 to read as follows:

Roof extension. All open vent pipes which extend through a roof shall be terminated at least six inches (152 mm) above the roof except that where a roof is to be used for any purpose other than weather protection, the extensions shall be run at least seven feet (2,134 mm) above the roof.

(b) *Section P3111.* Amend by deleting Section P3111 in its entirety.

(c) *Section P3112.2.* Amend by deleting the section in its entirety and adding a new Section P3112.2 to read as follows:

Installation. Traps for island sinks and similar equipment shall be roughed-in above the floor and may be vented by extending the vent as high as possible, but not less than the drainboard height and then returning it downward and connecting it to the horizontal sink drain immediately downstream from the vertical fixture drain. The return vent shall be connected to the horizontal drain through a wye-branch fitting and shall, in addition, be provided with a foot vent taken off the vertical fixture vent by means of a wye-branch immediately below the floor and extending to the nearest partition and then through the roof to the open air or may be connected to other vents at a point not less than six inches (152 mm) above the flood level rim and a minimum slope of one-quarter inch per foot (20.9 mm/m) back to the drain shall be maintained. The return bend used under the drainboard shall be a one-piece fitting or an assembly of a 45-degree (0.79 radius), a 90-degree (1.6 radius) and a 45-degree (0.79 radius) elbow in the order named. Pipe sizing shall be as elsewhere required in this Code. The island sink drain, upstream of the return vent, shall serve no other fixtures. An accessible cleanout shall be installed in the vertical portion of the foot vent.

(17) *Electrical Chapters 34, 35, 36, 37, 38, 39, 40, 41,42 and 43.* Amend by deleting the chapters in their entirety and adding a referral notice to Chapters 33, 34, 35, 36, 37, 38, 39, 40, 41, 42 and 43 to read as follows:

Refer to the adopted *National Electrical Code* for all references regarding electrical installations within the *International Residential Code*.

SECTION 2. That all ordinances or portions thereof in conflict with the provisions of this ordinance, to the extent of such conflict, are hereby repealed. To the extent that such ordinances or portions thereof are not in conflict herewith, the same shall remain in full force and effect.

SECTION 3. That should any word, sentence, clause, paragraph or provision of this ordinance be held to be invalid or unconstitutional, the validity of the remaining provisions of this ordinance shall not be affected and shall remain in full force and effect.

SECTION 4. That all chapters, sections and subsections amended by this ordinance are intended to amend the specified corresponding chapters, sections and subsections of the *International Residential Code*, 2015 Edition, even though applicable intervening articles and divisions or similar subparts may not be set out in this ordinance.

SECTION 5. That any person (as defined in Chapter 1, Section 1-2 of the Code of the City of Mesquite, Texas, as amended) violating any of the provisions or terms of this ordinance shall be deemed to be guilty of a Class C Misdemeanor and upon conviction thereof, shall be subject to a fine not to exceed Two Thousand ($2,000.00) Dollars for each offense, provided, however, if the maximum penalty provided for by this ordinance for an offense is greater than the maximum penalty provided for the same offense under the laws of the State of Texas, the maximum penalty for violation of this ordinance for such offense shall be the maximum penalty provided by the laws of the State of Texas. Each day or portion of a day any violation of this ordinance continues shall constitute a separate offense.

SECTION 6. That this ordinance shall take effect on and after May 15, 2017.

DULY PASSED AND APPROVED by the City Council of the City of Mesquite, Texas, on the 3rd day of April, 2017.

Stan Pickett
Mayor

ATTEST:

Sonja Land
City Secretary

APPROVED:

B. J. Smith
City Attorney